Dec.1.2025 Copyright 2025 HIROSE ELECTRIC CO., LTD. All Rights Reserved.
In case of consideration for using Automotive equipment / device which demand high reliability, kindly contact our sales window correspondents.

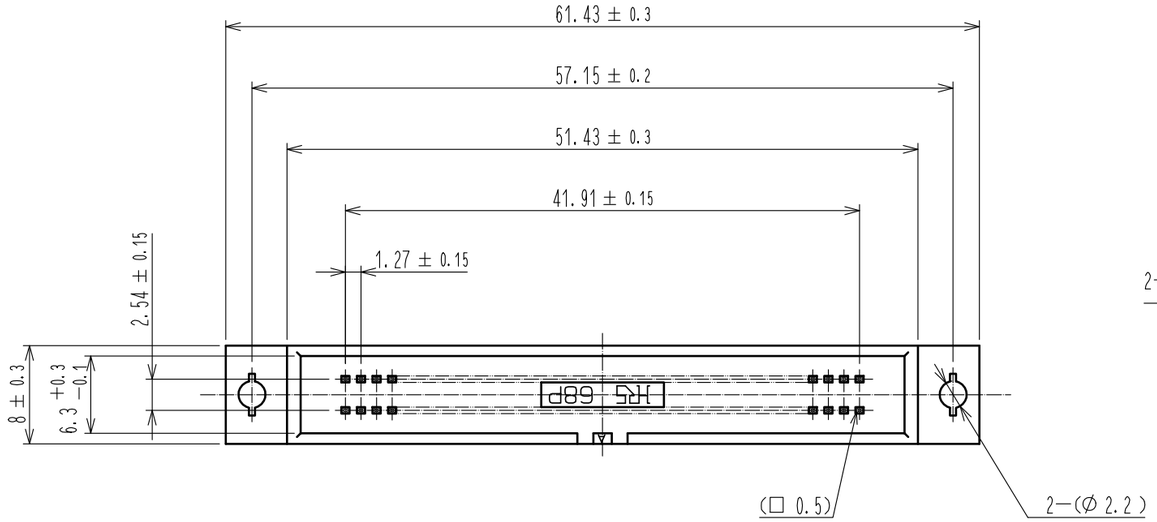

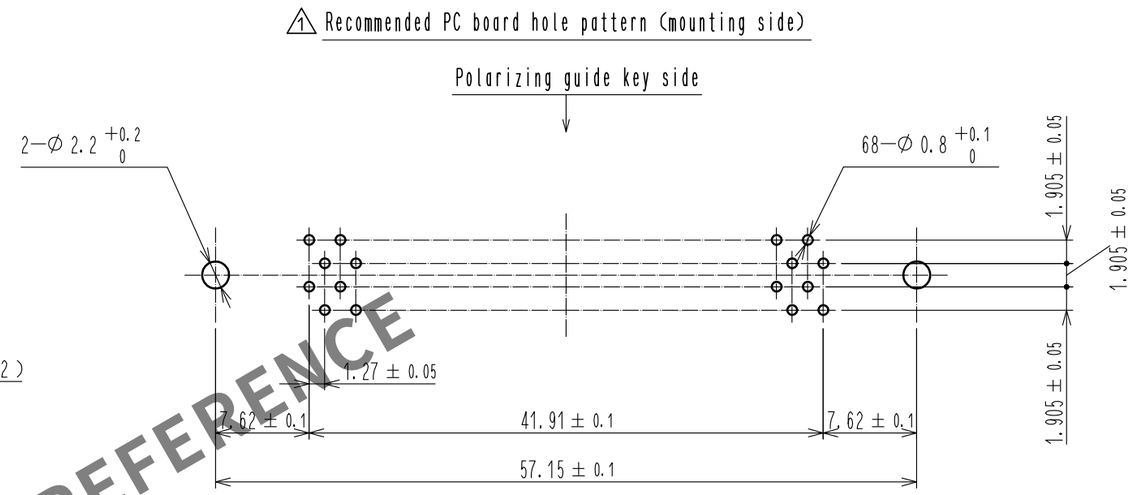

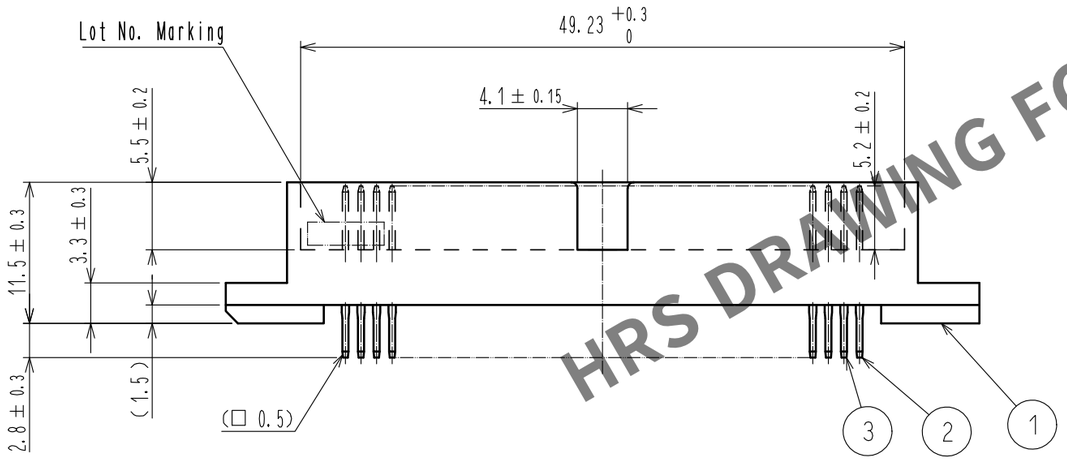

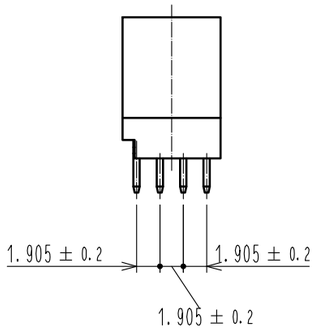

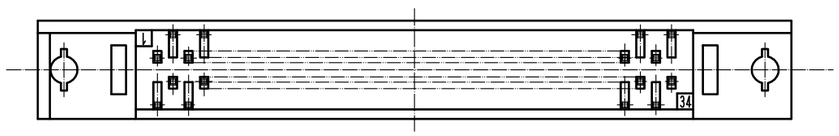

HRS DRAWING FOR REFERENCE

Notes 1 The dimensions in parentheses are for reference.

NO.	MATERIAL	FINISH , REMARKS	NO.	MATERIAL	FINISH , REMARKS
2	BRASS	Contact area : Gold 0.2μm min. Dip area : TIN-Plating 2μm min. Under plating : Nickel 2.5μm min.	3	BRASS	Contact area : Gold 0.2μm min. Dip area : TIN-Plating 2μm min. Under plating : Nickel 2.5μm min.
1	PBT	BLACK UL94V-0			

UNITS	SCALE	COUNT	DESCRIPTION OF REVISIONS	DESIGNED	CHECKED	DATE
mm	2 : 1	⚠1 1	DIS-F-00003693	TM. NAKAJIMA	HT. YAMAGUCHI	18.09.11

HRS HIROSE ELECTRIC CO., LTD.

APPROVED	HT. YAMAGUCHI	18.06.25
CHECKED	HT. YAMAGUCHI	18.06.25
DESIGNED	TY. EDAGAWA	18.06.25
DRAWN	MK. OOKI	18.06.21

DRAWING NO. EDC-019080-71-21
PART NO. HIF6B-68PA-1.27DSA(71)
CODE NO. CL631-0359-4-71
⚠1 1/1

FORM HC0011-5-7