Feb.1.2026 Copyright 2026 HIROSE ELECTRIC CO., LTD. All Rights Reserved.
In case of consideration for using Automotive equipment / device which demand high reliability, kindly contact our sales window correspondents.

	COUNT	DESCRIPTION OF REVISIONS	BY	CHKD	DATE		COUNT	DESCRIPTION OF REVISIONS	BY	CHKD	DATE
△					. .	△					. .
△					. .	△					. .
△					. .	△					. .

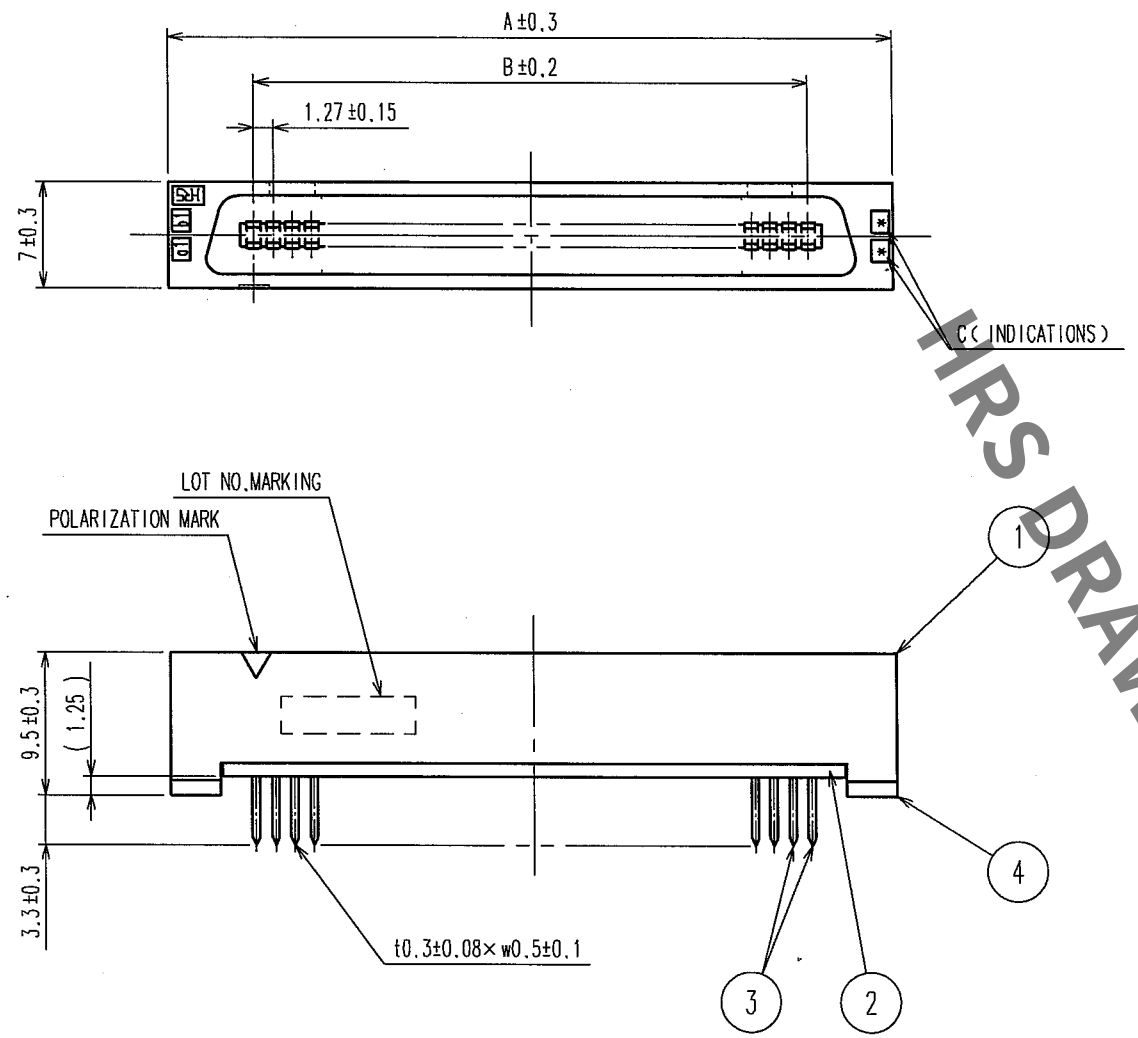

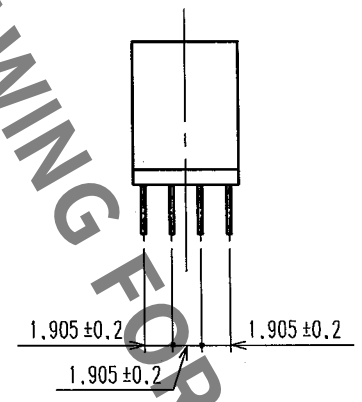

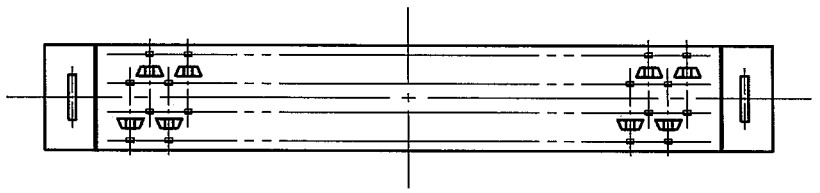

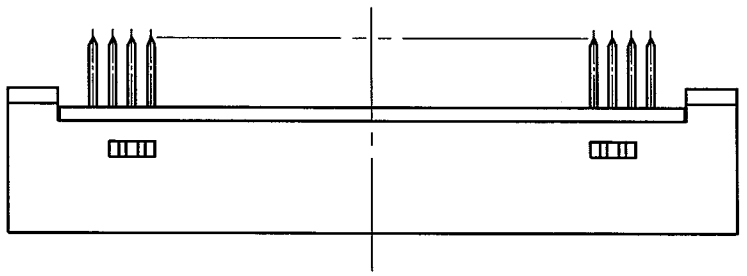

RECOMMENDEND PC BOARD HOLE PATTERN(MOUNTING SIDE)
t=1.6

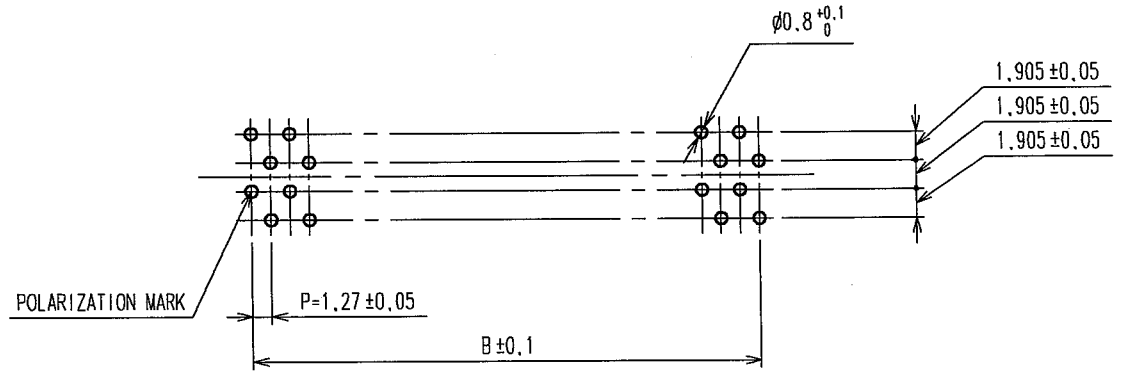

PART No.	CODE No.	2	A	B	C
FX2CA1-20P-1.27DSA(71)	CL572-2311-6-71	20	22.75	11.43	10
FX2CA1-32P-1.27DSA(71)	CL572-2312-9-71	32	30.37	19.05	16
FX2CA1-40P-1.27DSA(71)	CL572-2313-1-71	40	35.45	24.13	20
FX2CA1-52P-1.27DSA(71)	CL572-2314-4-71	52	43.07	31.75	26
FX2CA1-60P-1.27DSA(71)	CL572-2315-7-71	60	48.15	36.83	30
FX2CA1-68P-1.27DSA(71)	CL572-2316-0-71	68	53.23	41.91	34
FX2CA1-80P-1.27DSA(71)	CL572-2317-2-71	80	60.85	49.53	40
FX2CA1-100P-1.27DSA(71)	CL572-2318-5-71	100	73.55	62.23	50
FX2CA1-120P-1.27DSA(71)	CL572-2319-8-71	120	86.25	74.93	60

NOTES 1. THE DIMENSIONS IN PARENTHESES ARE FOR REFERENCE.
2 NUMBER OF PIN.

HRS DRAWING FOR REFERENCE

NO.	MATERIAL	FINISH, REMARKS
4	POLYAMIDE	BLACK UL94V-0
1,2	POLYAMIDE	BLACK UL94V-0

NO.	MATERIAL	FINISH, REMARKS
3	PHOSPHOR BRONZE	CONTACT AREA:GOLD 0.2μm min DIP AREA:TIN-PLATING 2μm min UNDER PLATING:NICKEL 2μm min

CODE NO.(OLD)	DRAWN	DESIGNED	CHECKED	APPROVED	RELEASED
CL	I.OKAYAMA	K.NAKAMURA	H.OKAWA	H.OKAWA	
	04.06.02	04.06.02	04.06.09	04.06.09	. .

SCALE FREE
UNITS mm

DRAWING NO. EDC3-083053-21

PART NO. FX2CA1-**P-1.27DSA(71)

HRS HIROSE ELECTRIC CO., LTD

CODE NO. CL572

1/1

TO
PCK